CO2037 – Electrical Electronic Circuits

Bipolar Junction Transistor

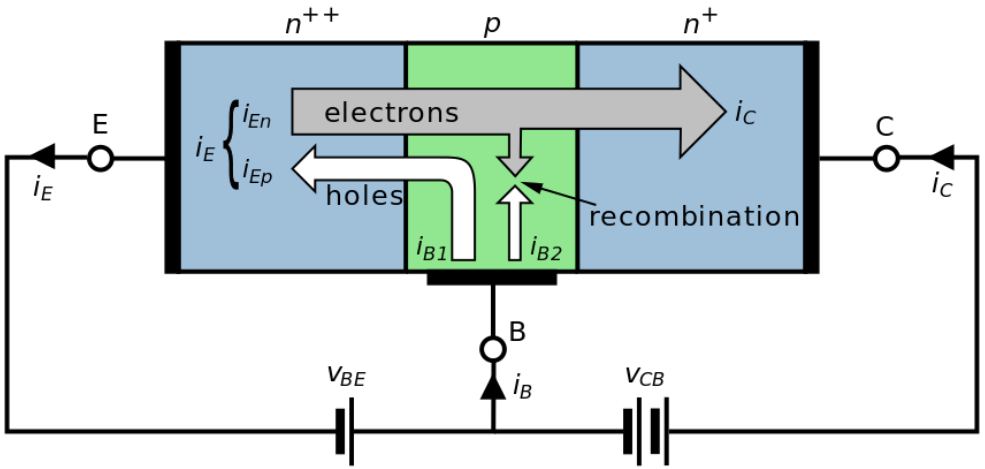

Image Source: Internet

Bipolar Junction Transistor

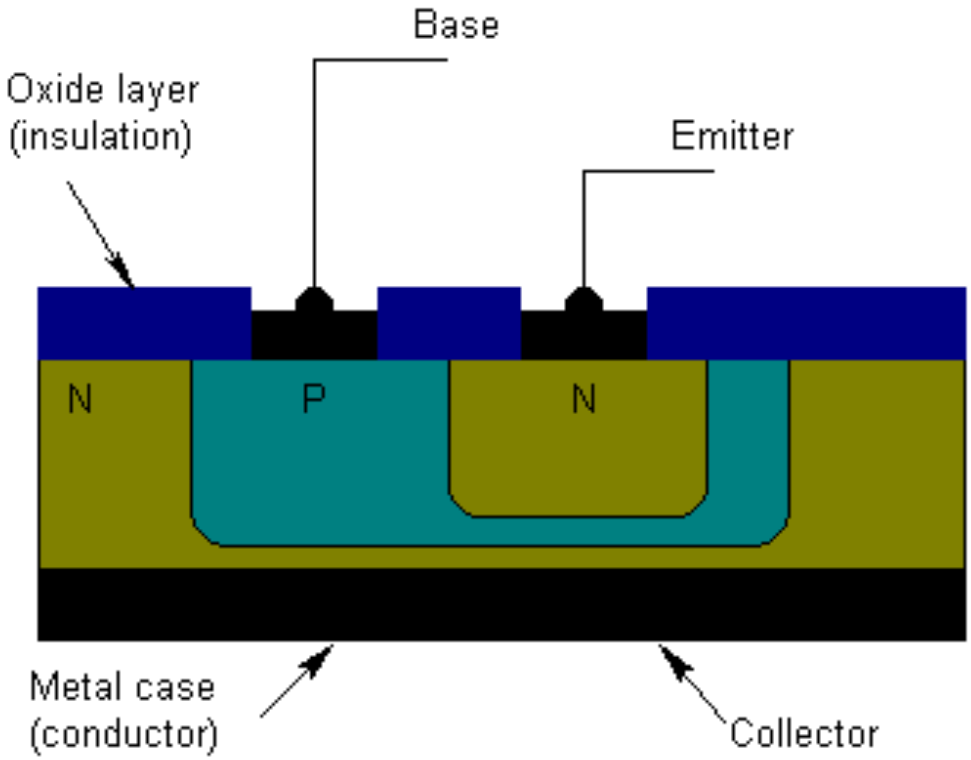

https://www.youtube.com/watch?v=-VwPSDQmdjM

Image Source: Internet

Bipolar Junction Transistor

https://www.youtube.com/watch?v=-VwPSDQmdjM

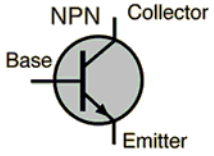

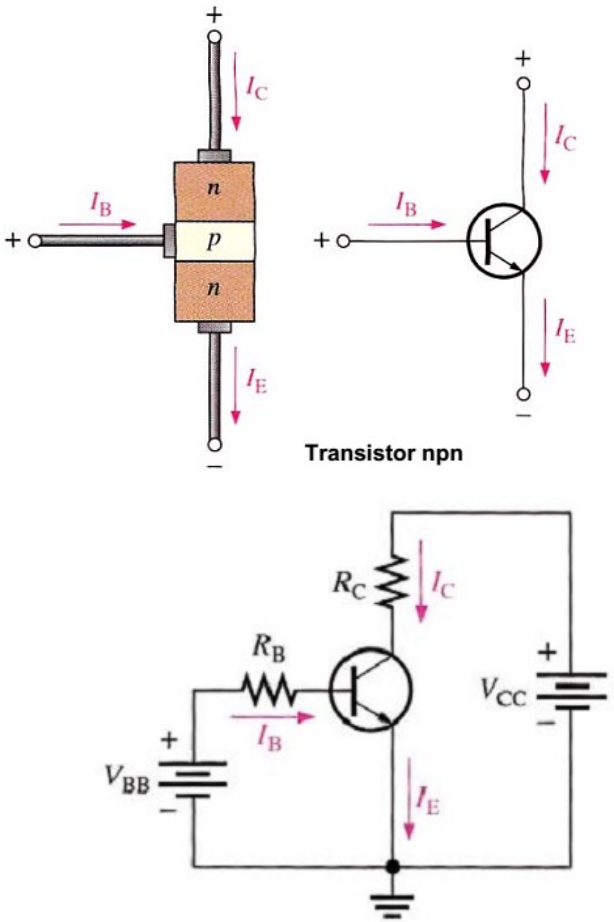

(a) *npn*

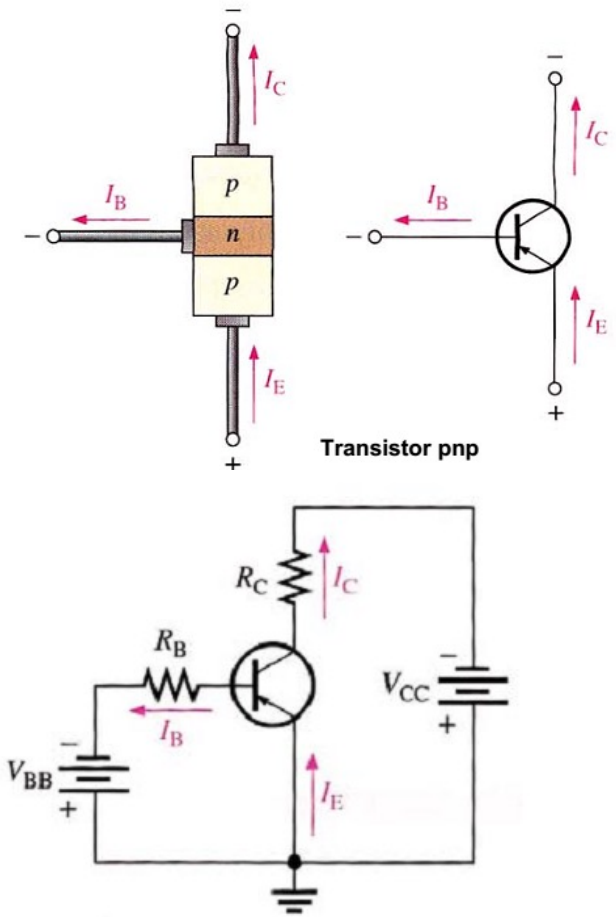

(b) *pnp*

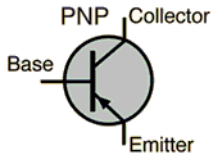

BJT as Amplifier

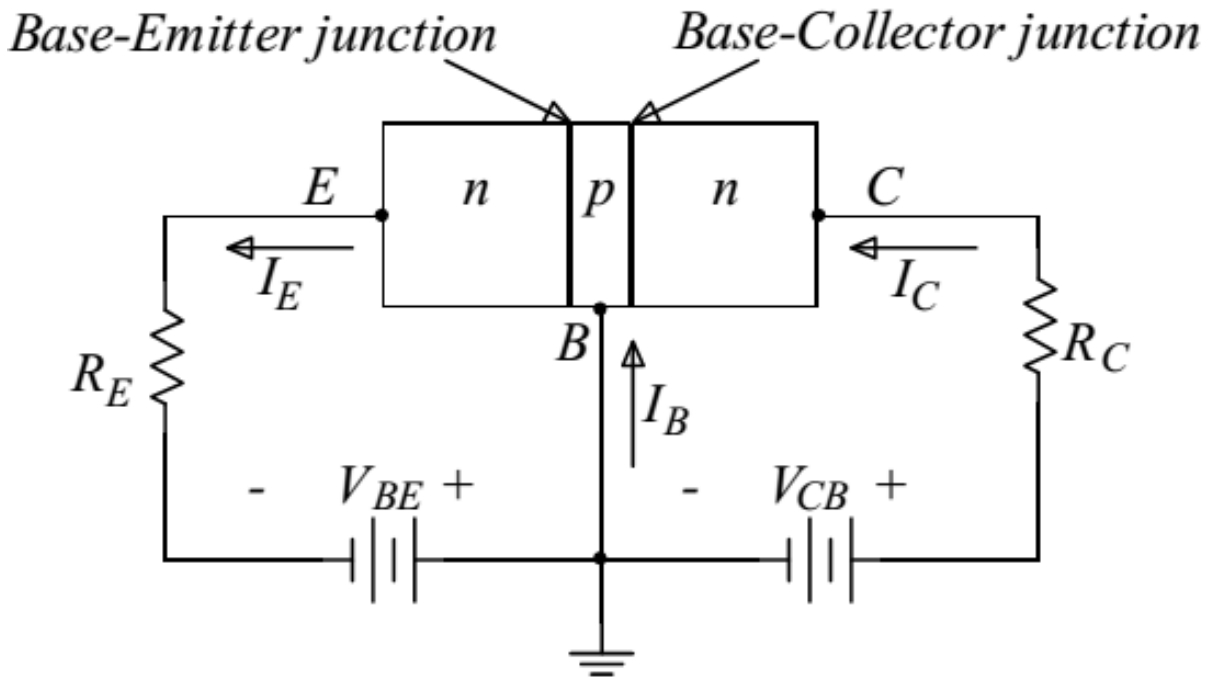

$$I_E = I_C + I_B$$

$$\beta_{DC} = \frac{I_C}{I_B}$$

$$\alpha_{DC} = \frac{I_C}{I_E}$$

Voltages in a BJT

- V_{CC} , V_{BB}
- V_C , V_B , V_E
- V_{BE} , V_{CE} , V_{CB}

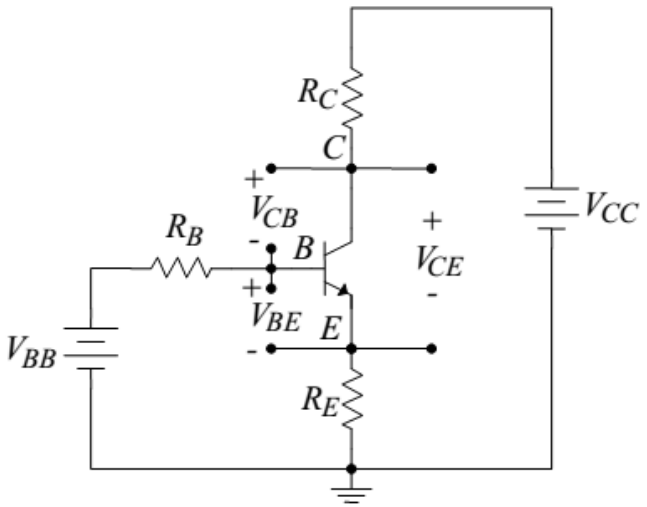

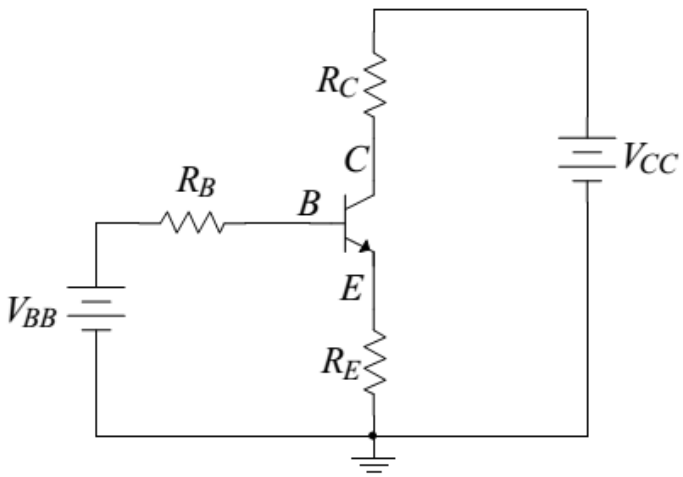

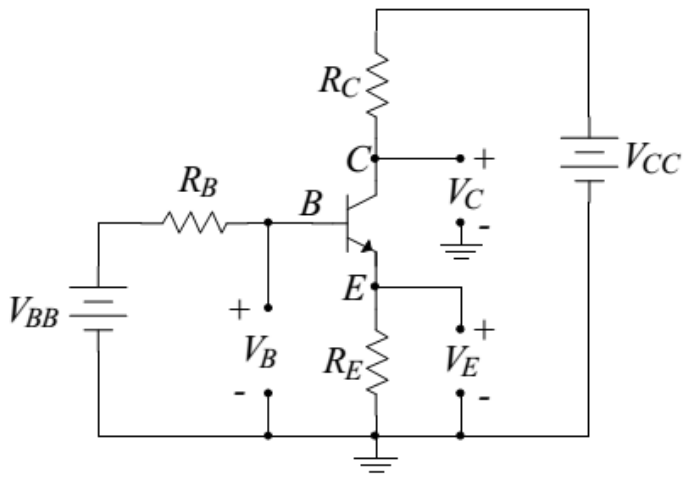

Current and Voltage Analysis

- E-B: Forward Bias (like diode)

  $V_{BE} \approx 0.7V$

- Base Circuit

$$V_{BB} = R_B \bullet I_B + V_{BE}$$

$$\boxed{I_B = \frac{V_{BB} - V_{BE}}{R_B}}$$

- Collector Circuit

$$V_{CC} = R_C \bullet I_C + V_{CE}$$

$$\boxed{V_{CE} = V_{CC} - R_C \bullet I_C = V_{CC} - R_C \bullet (\beta_{DC} . I_B)}$$

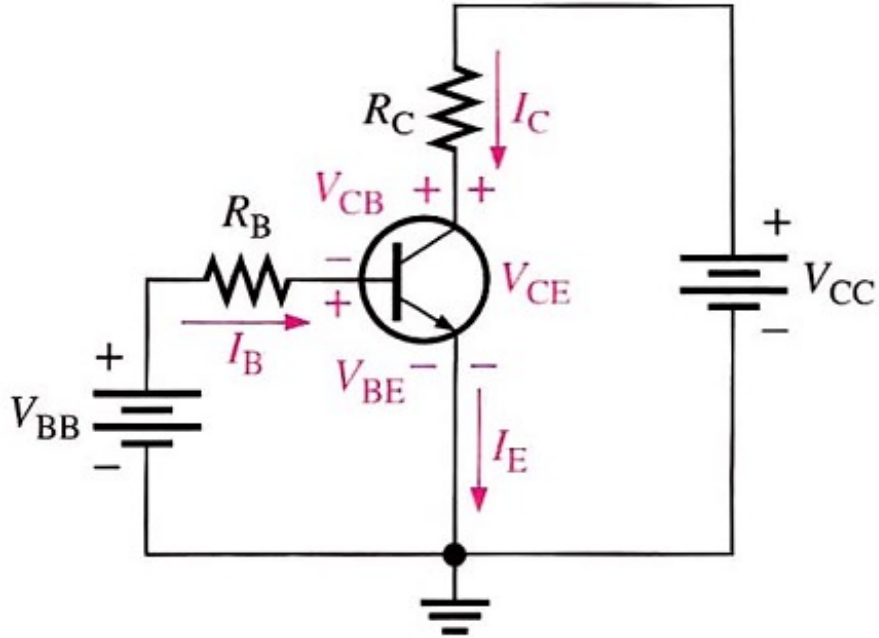

Load Line Analysis

- DC & X Axis: $\mathbf{V_{CE} = V_{CC} \Rightarrow I_C = 0}$
- DC & Y Axis: $\mathbf{I_C = V_{CC}/R_C \Rightarrow V_{CE} = 0}$
- DC & Characteristic Line: *Q-point*

$$V_{CE} = V_{CC} - R_C.I_C$$

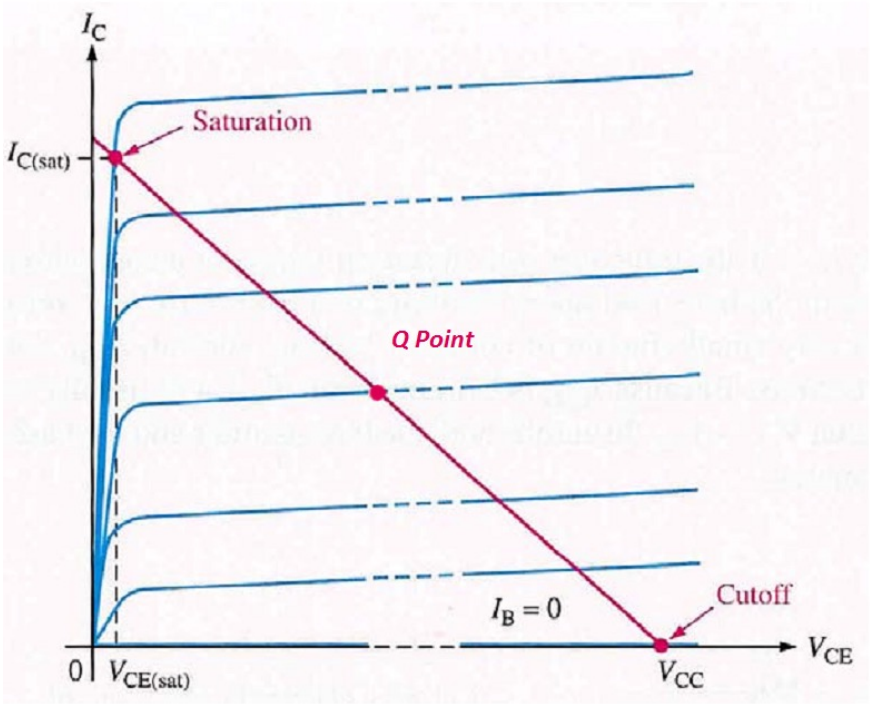

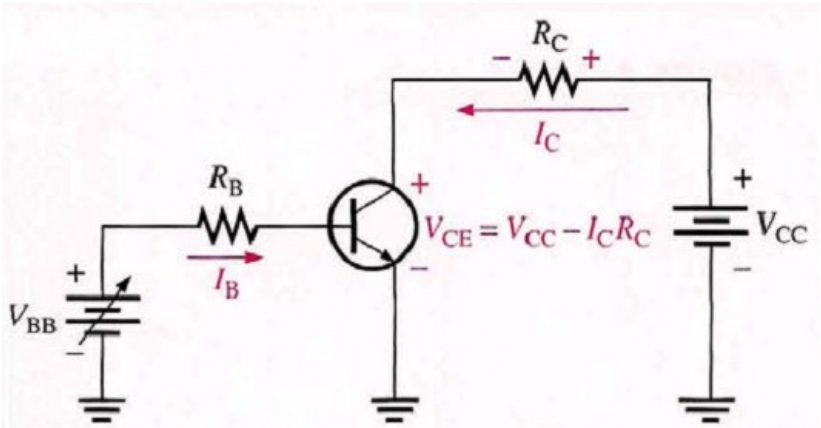

Voltage Division

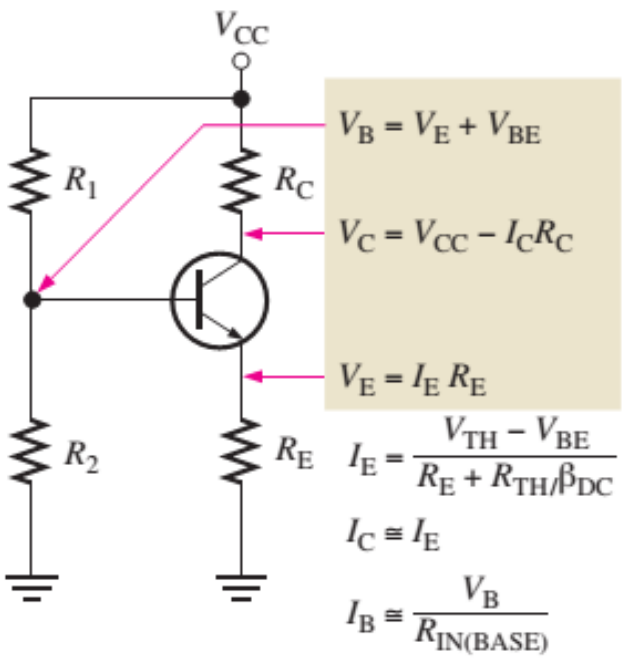

$$R_{IN(BASE)} = V_B/I_B = V_B/(I_E/\beta_{DC})$$

$$V_{TH} = \left(\frac{R_2}{R_1 + R_2}\right)V_{CC} \quad R_{TH} = \frac{R_1 R_2}{R_1 + R_2}$$

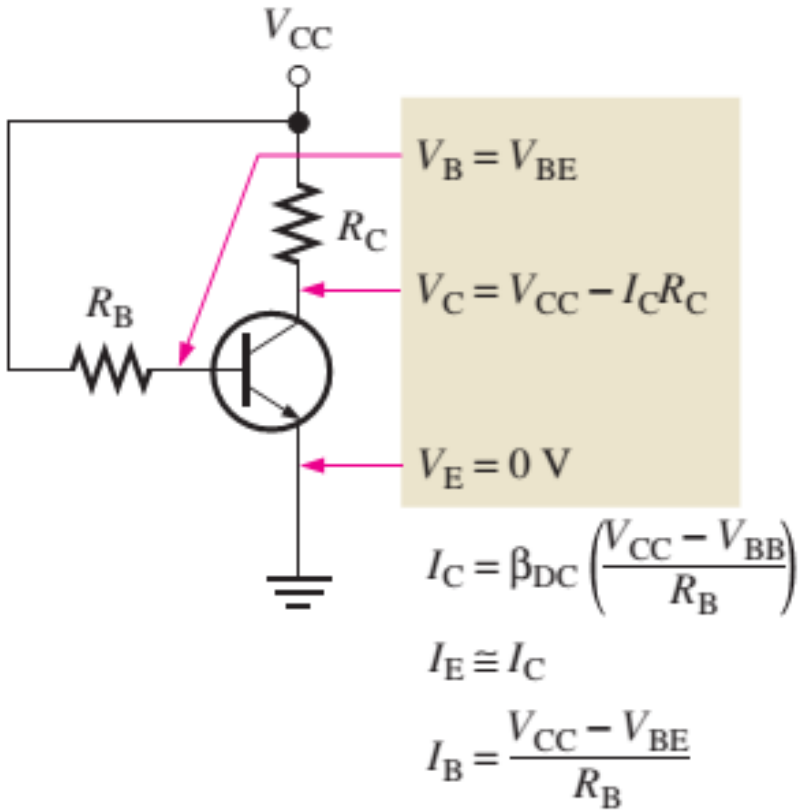

Voltage Division

$$R_{TH} = \frac{R_1 R_2}{R_1 + R_2}$$

$$V_{TH} = \left(\frac{R_2}{R_1 + R_2}\right) V_{CC}$$

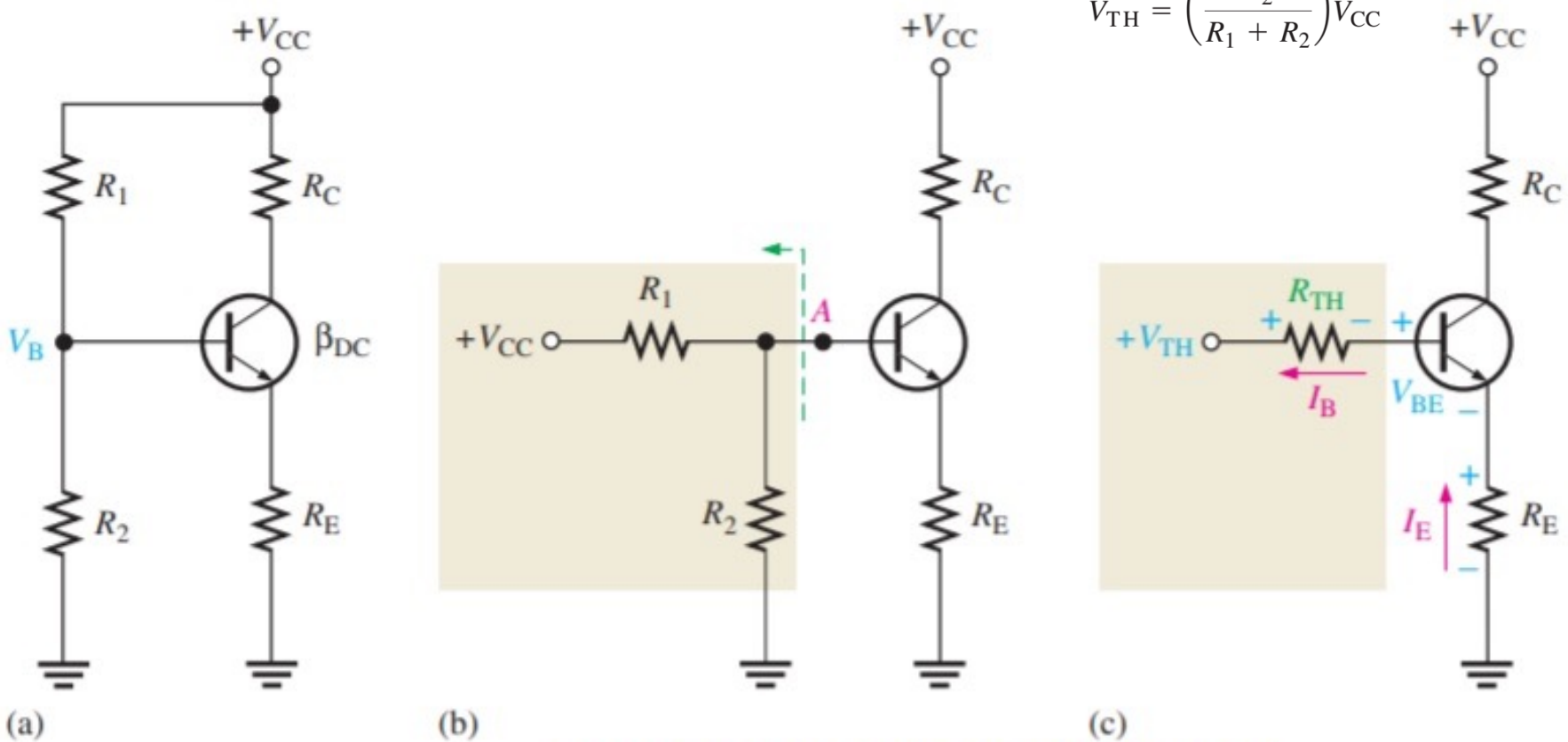

Exercise 1

- Determine I_B ,I_C ,I_E ,V_{BE} ,V_{CE} and V_{CB} for the given circuit when β_{DC} = 150

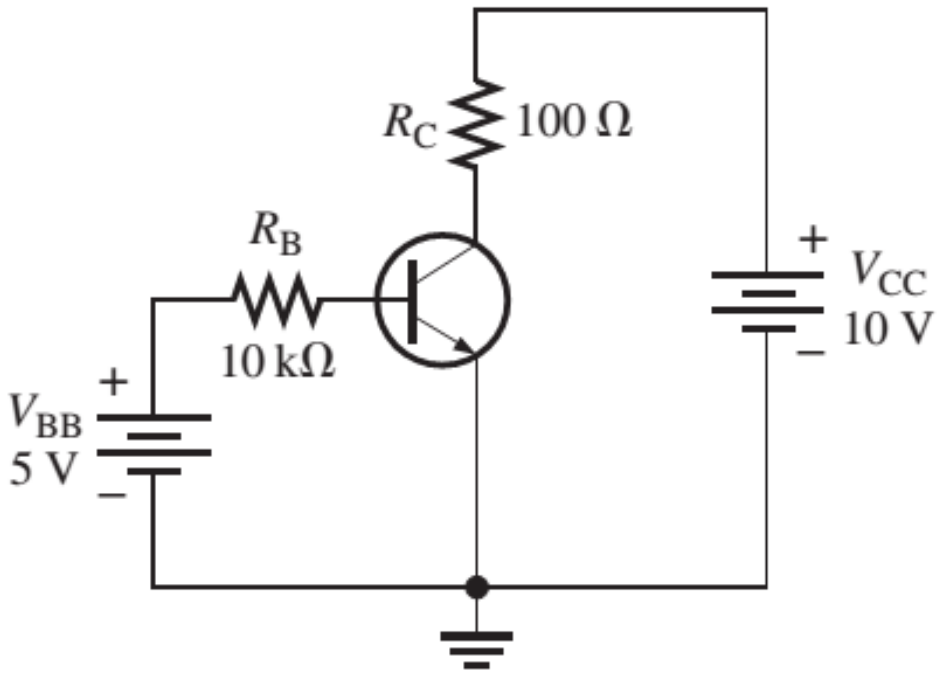

Solution 1

$$I_B = \frac{V_{BB} - V_{BE}}{R_B} = \frac{5\text{ V} - 0.7\text{ V}}{10\text{ k}\Omega} = \mathbf{430\ \mu A}$$

$$I_C = \beta_{DC} I_B = (150)(430\ \mu\text{A}) = \mathbf{64.5\ mA}$$

$$I_E = I_C + I_B = 64.5\text{ mA} + 430\ \mu\text{A} = \mathbf{64.9\ mA}$$

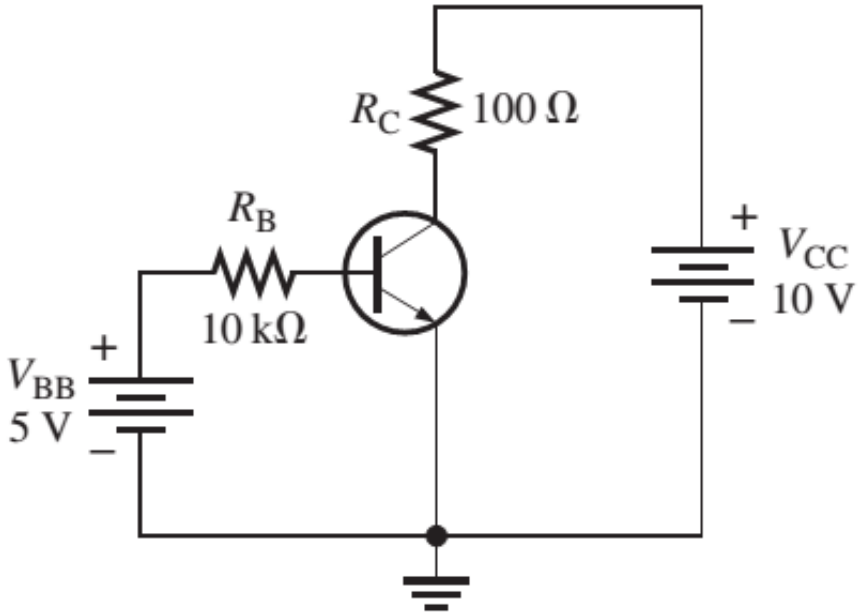

$$V_{CE} = V_{CC} - I_C R_C = 10\text{ V} - (64.5\text{ mA})(100\ \Omega) = 10\text{ V} - 6.45\text{ V} = \mathbf{3.55\ V}$$

$$V_{CB} = V_{CE} - V_{BE} = 3.55\text{ V} - 0.7\text{ V} = \mathbf{2.85\ V}$$

Exercise 2

- Determine I_B ,I_C ,I_E ,V_{BE} ,V_{CE} and V_{CB}

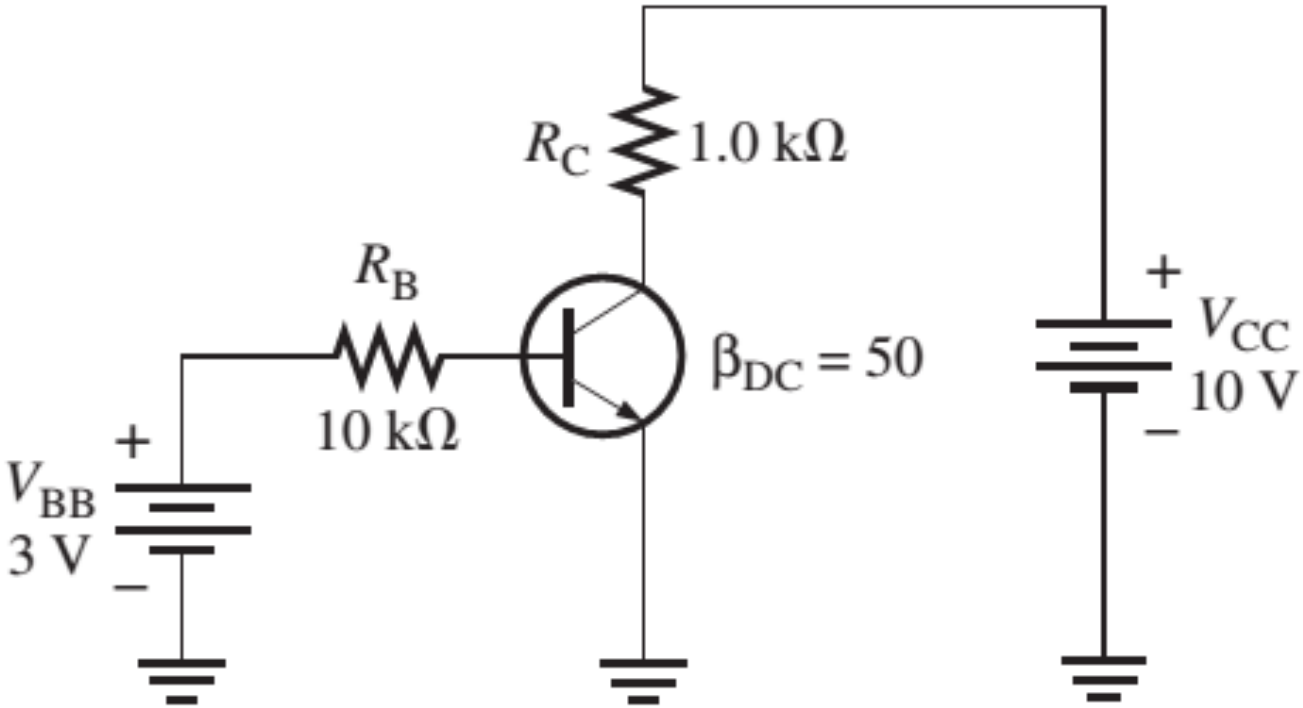

Solution 2

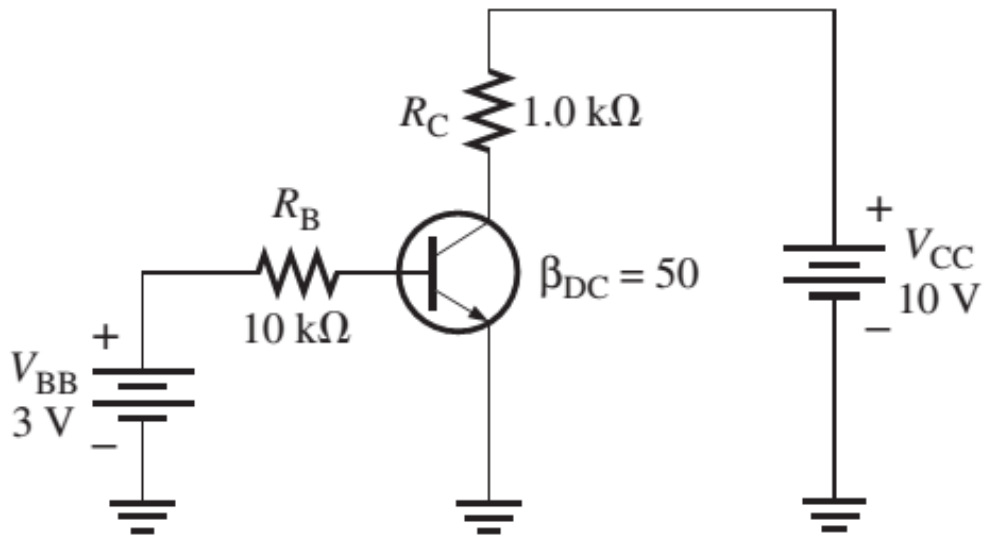

- Assume that the circuit is working linearly

$$I_B = \frac{V_{BB} - V_{BE}}{R_B} = \frac{3\text{ V} - 0.7\text{ V}}{10\text{ k}\Omega} = \frac{2.3\text{ V}}{10\text{ k}\Omega} = 0.23\text{ mA}$$

$$I_C = \beta_{DC} I_B = (50)(0.23\text{ mA}) = 11.5\text{ mA}$$

Exercise 3

- Determine β_{DC}

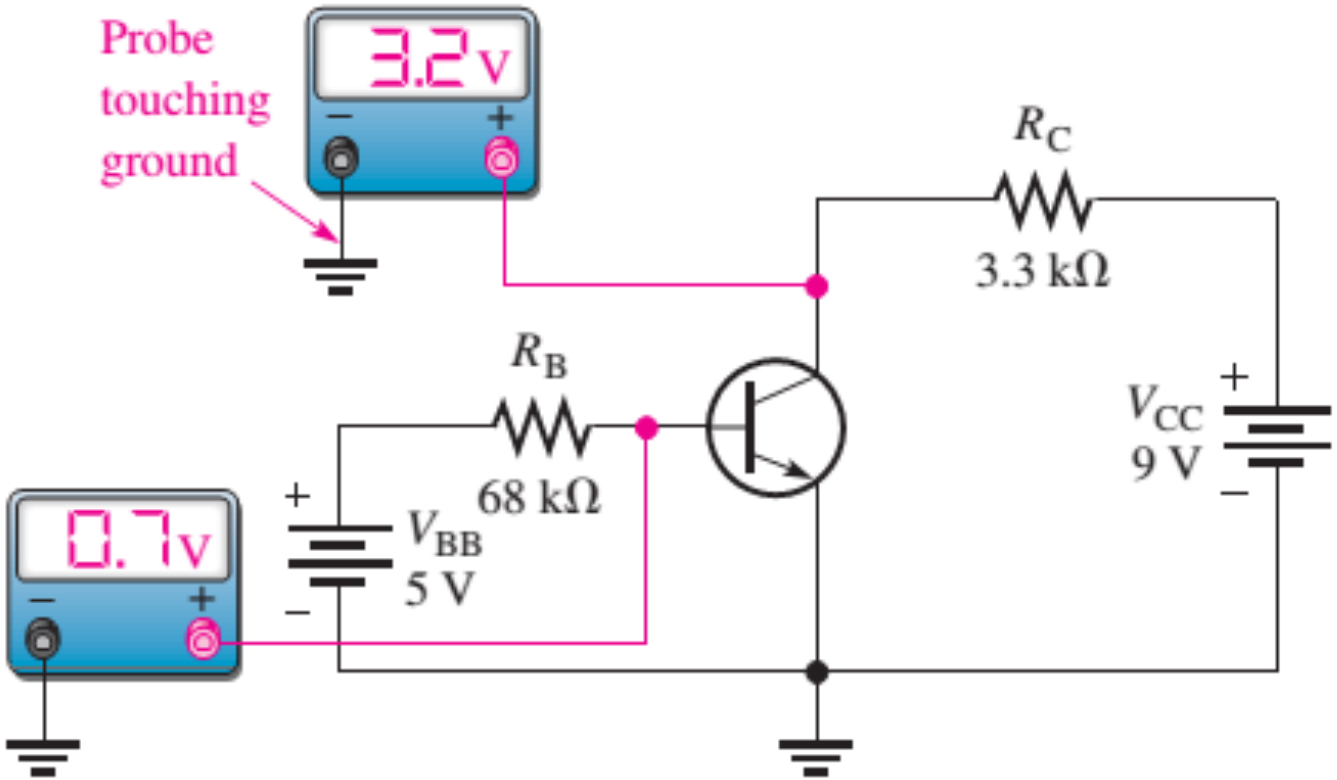

Exercise 4

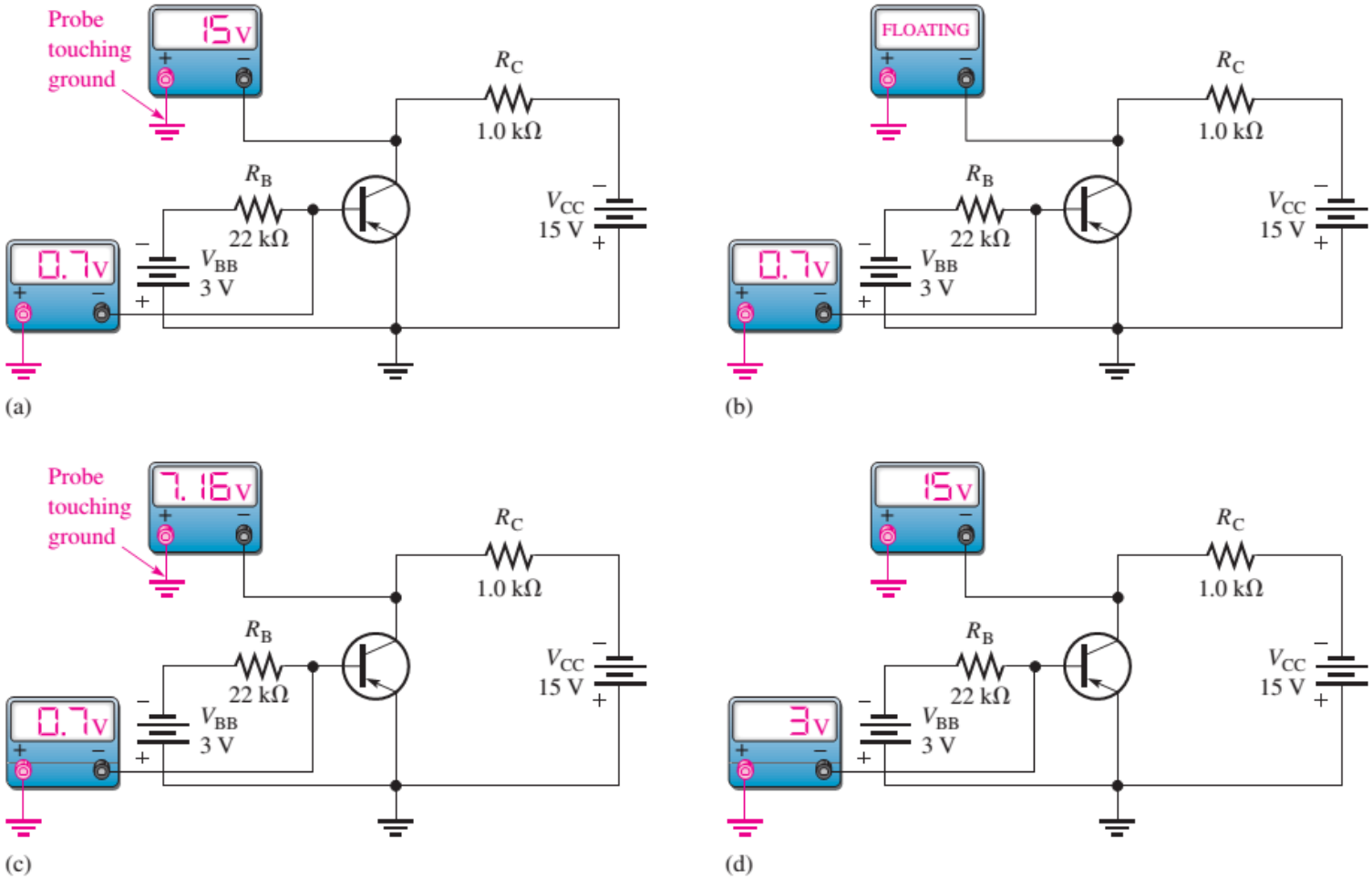
Probe touching ground
15 V
0.7 V
R_C
1.0 kΩ
R_B
22 kΩ
V_{BB}
3 V
V_{CC}
15 V
(a)
FLOATING
0.7 V
(b)
Probe touching ground
7.16 V
0.7 V
(c)
15 V
3 V
(d)

Exercise 5

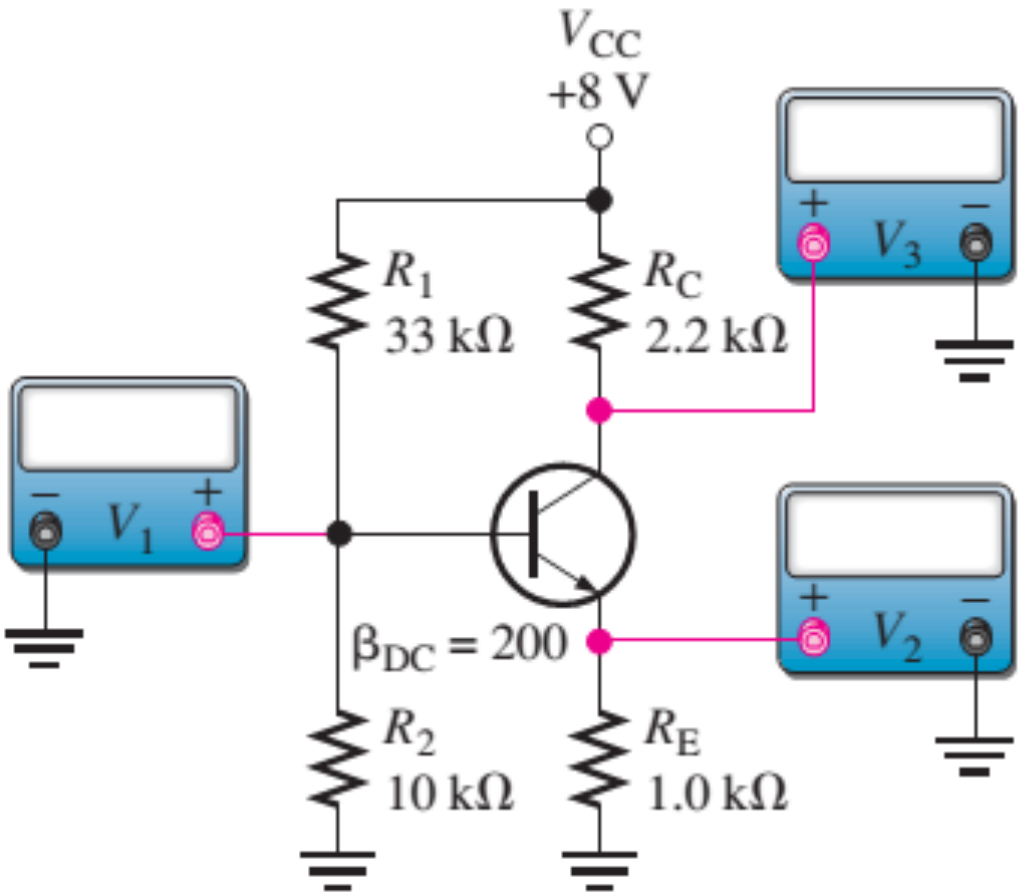

Further Reading

- https://slideplayer.com/slide/13805261/

Thevenin's Theorem

- Thevenin's Theorem states that "Any linear circuit containing several voltages and resistances can be replaced by just one single voltage in series with a single resistance connected across the load". In other words, it is possible to simplify any electrical circuit, no matter how complex, to an equivalent two-terminal circuit with just a single constant voltage source in series with a resistance (or impedance) connected to a load as shown below.

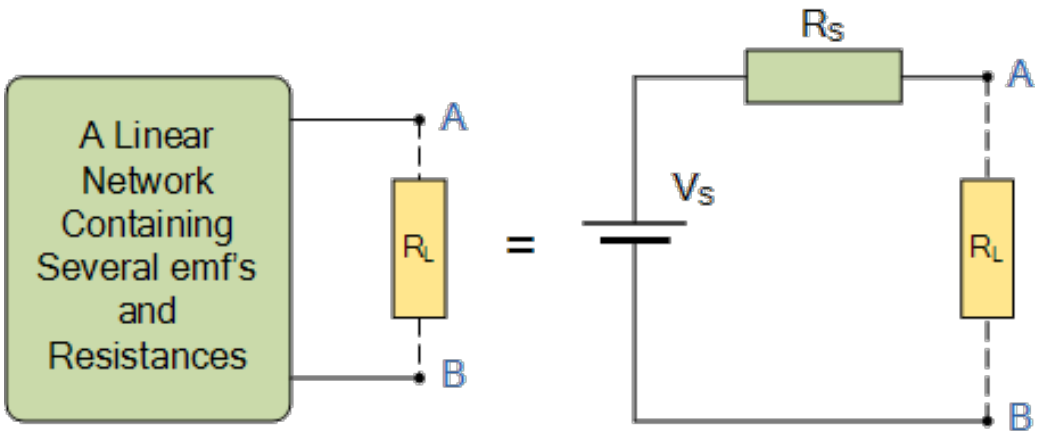

Thevenin's Theorem - Example

- Example

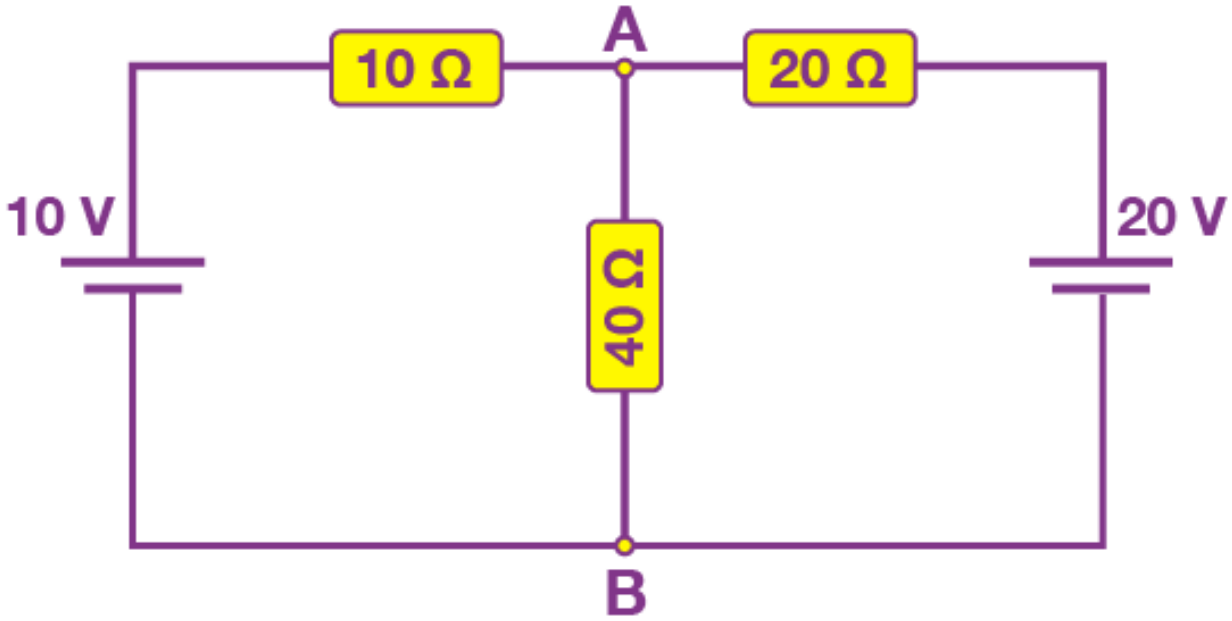

Thevenin's Theorem - Example

- **Step 1**. Remove the load resistance
- **Step 2**. Remove he voltage sources' internal resistance by shorting all the voltage sources connected to the circuit

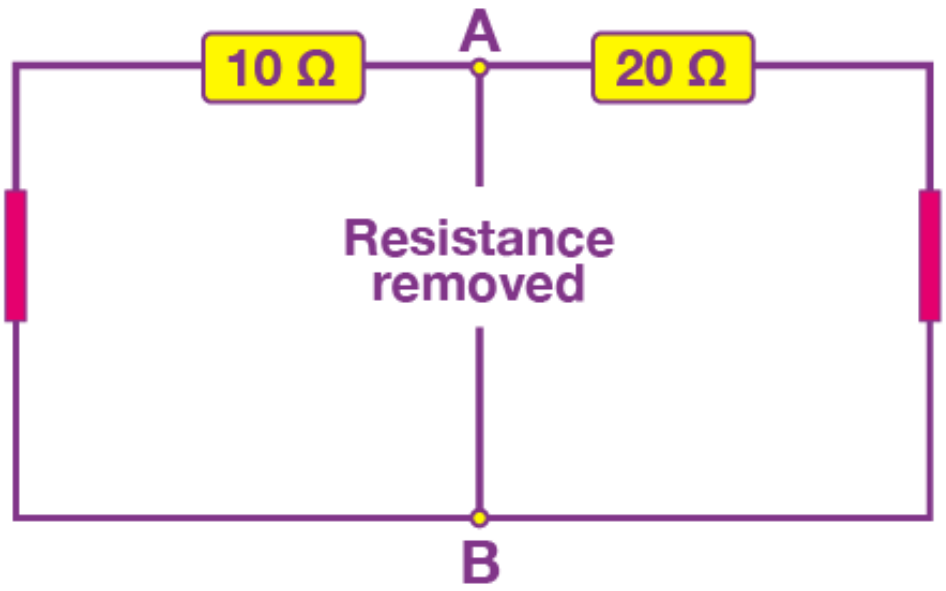

Thevenin's Theorem - Example

- Step 3. Find the equivalent resistance.

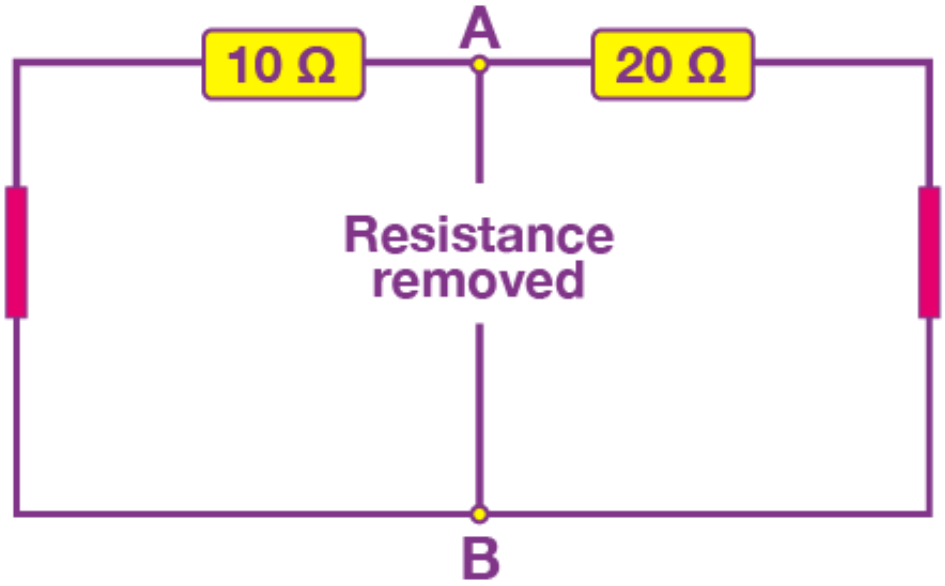

$$R_T = \frac{R_1 \times R_2}{R_1 + R_2} = \frac{20 \times 10}{20 + 10} = 6.67\,\Omega$$

Thevenin's Theorem - Example

- **Step 4**. Find the equivalent voltage

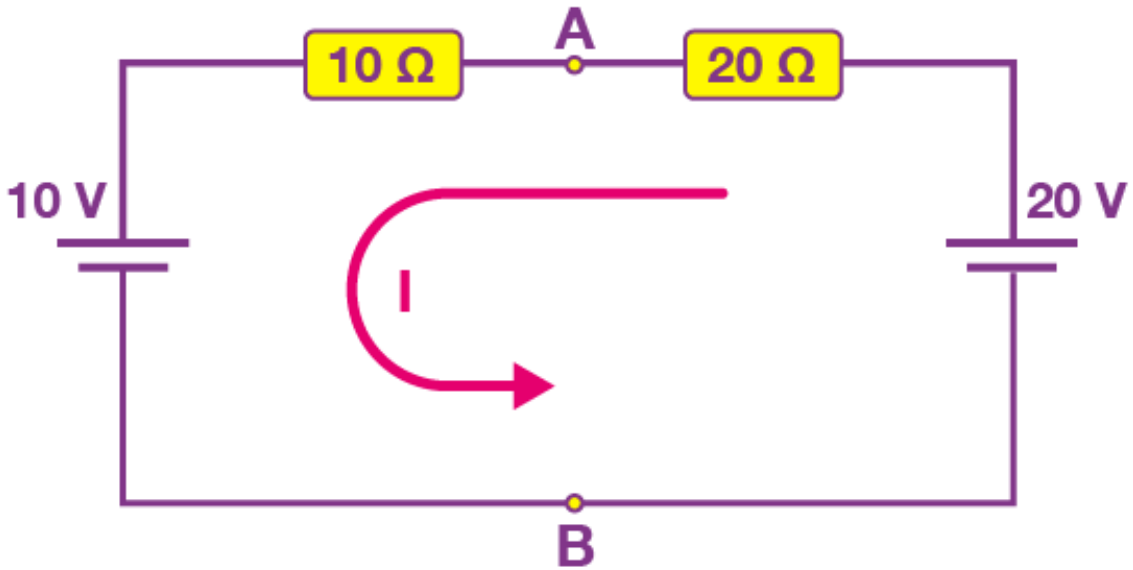

$$I = \frac{V}{R} = \frac{20\ V - 10\ V}{20\ \Omega + 10\ \Omega} = 0.33\ A$$

V_{AB} = 20 – (20 Ω x 0.33 A) = 13.33 V

or,

V_{AB} = 10 + (10 Ω x 0.33 A) = 13.33 V

Thevenin's Theorem - Example

- **Step 5**. Draw the Thevenin's equivalent circuit

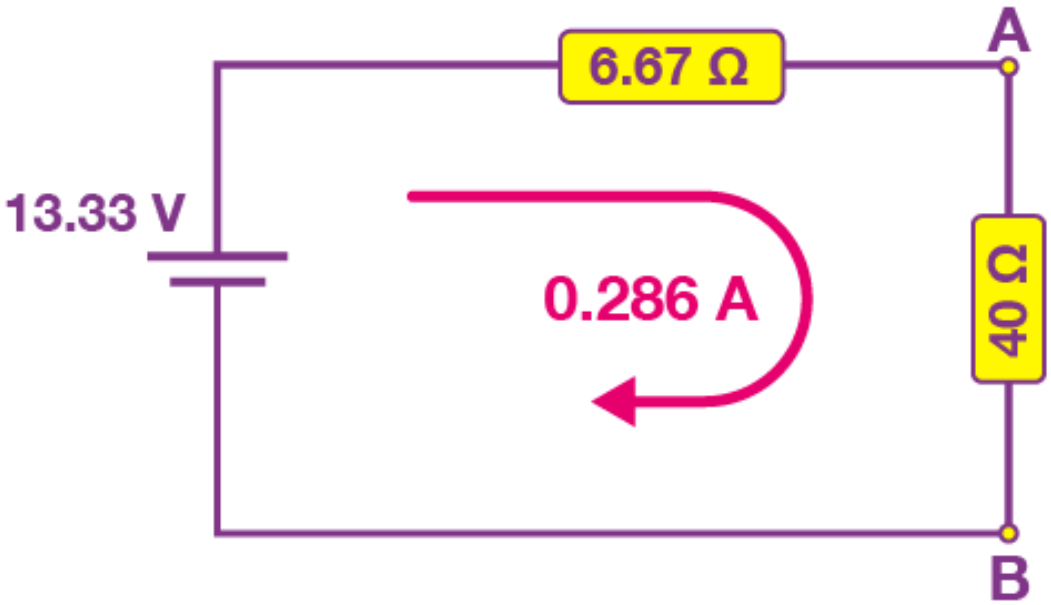

Voltage Division

$$R_{TH} = \frac{R_1 R_2}{R_1 + R_2}$$

$$V_{TH} = \left(\frac{R_2}{R_1 + R_2}\right) V_{CC}$$

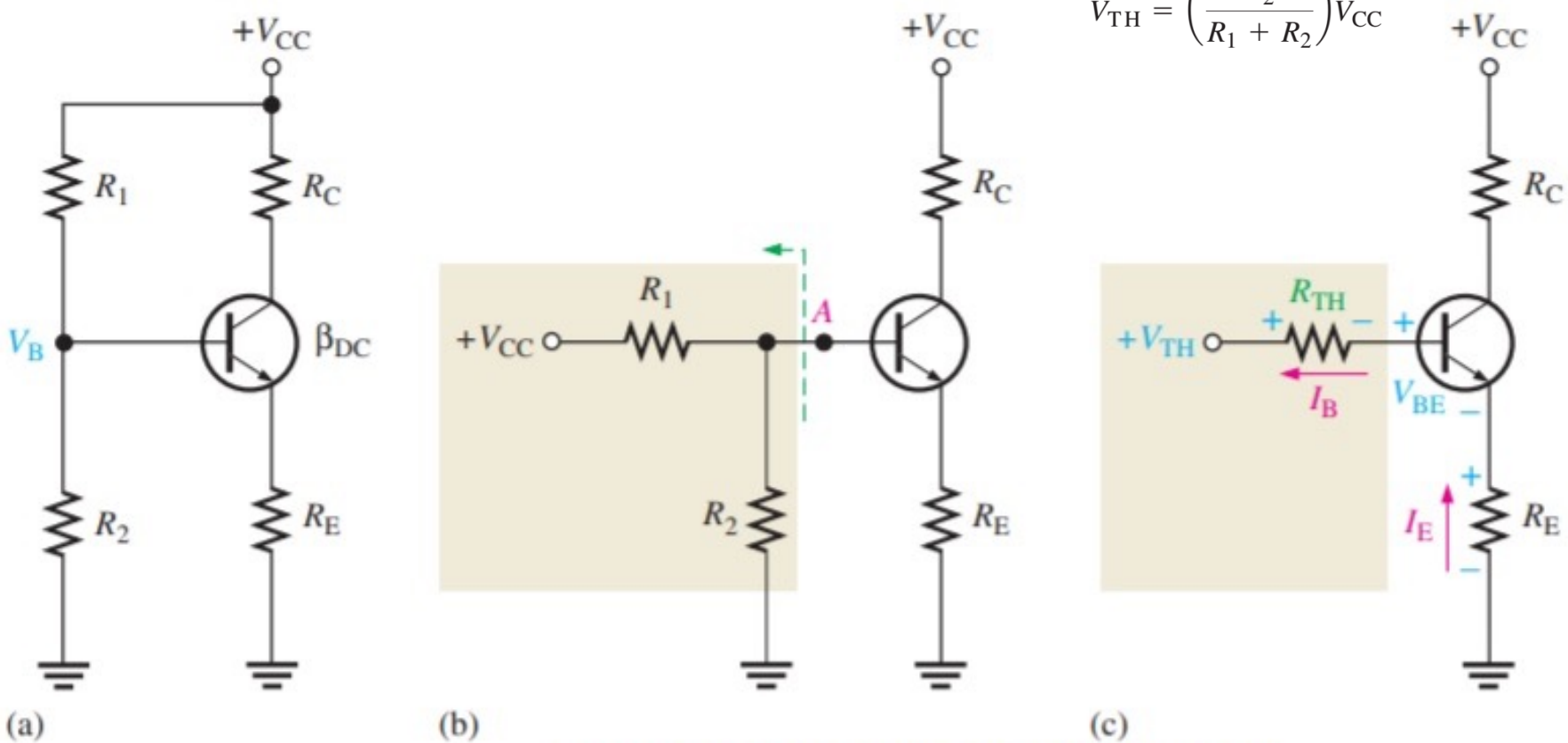

Thevenin's Theorem - Exercise

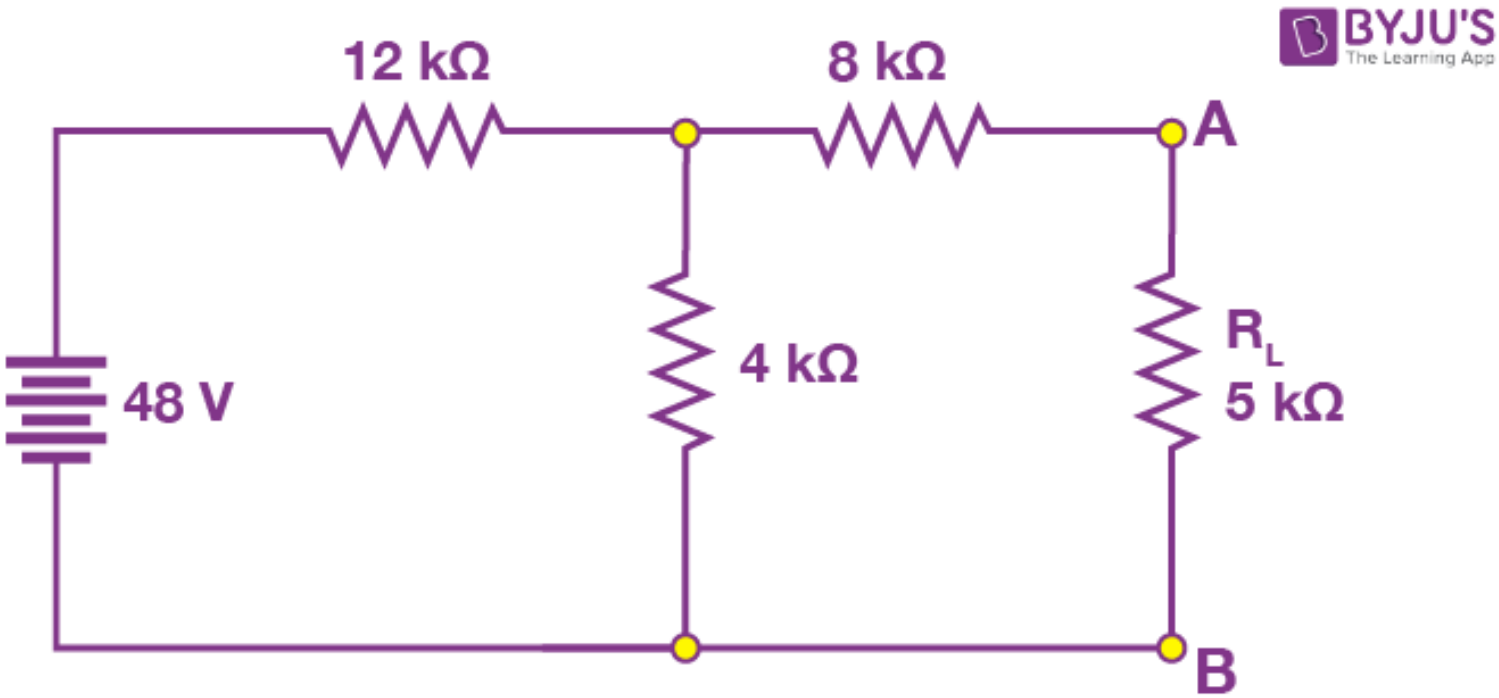
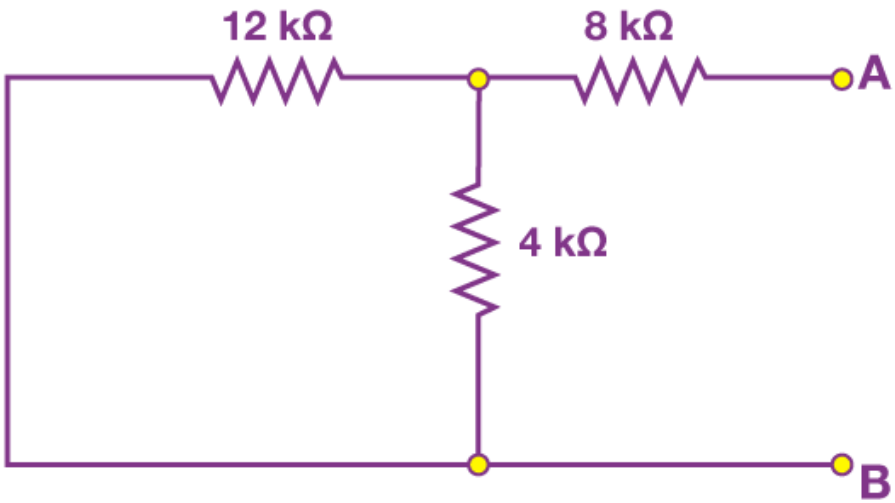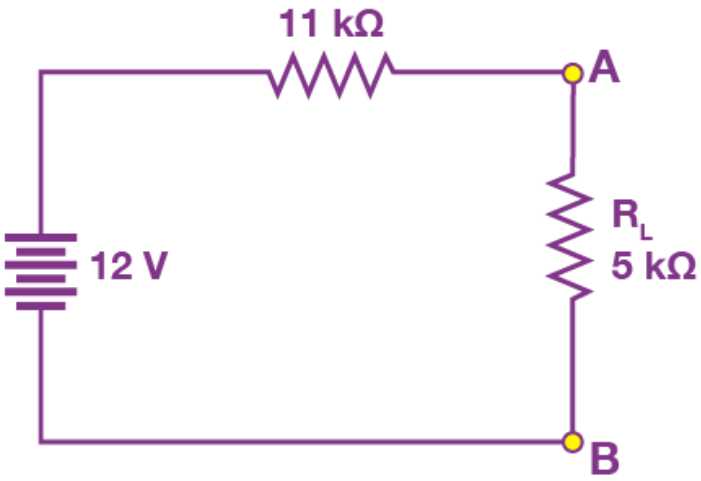
Thevenin's Theorem - Exercise